CLOUD BROWSING TF

WEB AND TV IG W3C

W3C TPAC MEETING, OCTOBER 26th, 2015 SAPPORO

Alexandra Mikityuk, Dr. Oliver Friedrich

AGENDA

- Introduction:
  - W3C relevance
  - From virtual Set-Top Box to Cloud RTEs and APIs
- Cloud Browsing TF
  - Outline/ Problem statement
  - Group scope/ goals
  - Participants so far (W3C and non-W3C members)
  - Working mode (TF IG, CG)
- What is done so far: Cloud Browser APIs
  - Cloud Browsing Reference Architecture: Function placement - from client-server to virtual OS
  - Cloud Browsing Use Cases/ APIs
    - Basic Use Cases
    - Practical tests

CLOUD BROWSING
W3C RELEVANCE

- Web & TV IG and corresponding TFs and WGs cover and provide ideas and specifications for nearly all use-cases relevant for TV
- The focus is on (device-) APIs providing access to content, data and hardware functionalities
- T-Labs have evangelized inside DT to make use of W3C's, HbbTV's and OIPF's specifications over the last years and succeeded: all future deployments will be browser-based and will support W3C and HbbTV specs.

- Open issues: what to do with legacy devices (STBs) and even new, low performance devices not supporting a local browser
- Solution: put the browser into the Cloud
- But: what happens if the browser does not run on the local device? Something feels wrong with regards to the existing specifications.

- Feasibility has been proven with the help of different partners but now it's time to look at the Cloud Browsers in a more mature manner: in W3C

INTRODUCTION

From virtual Set-Top Box to Cloud RTEs and APIs

VIRTUAL SET-TOP BOX

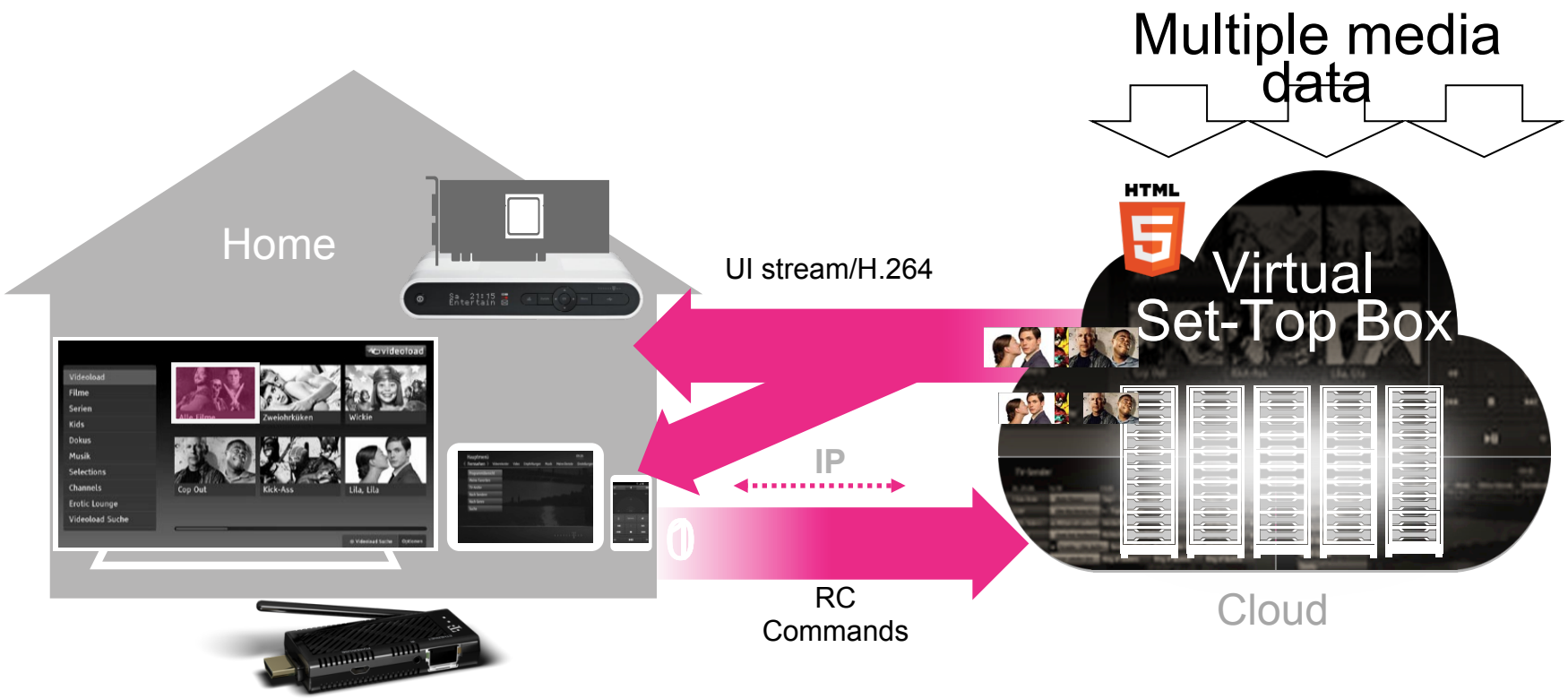

CLOUD BROWSER TO ENABLE CLOUD USER INTERFACE

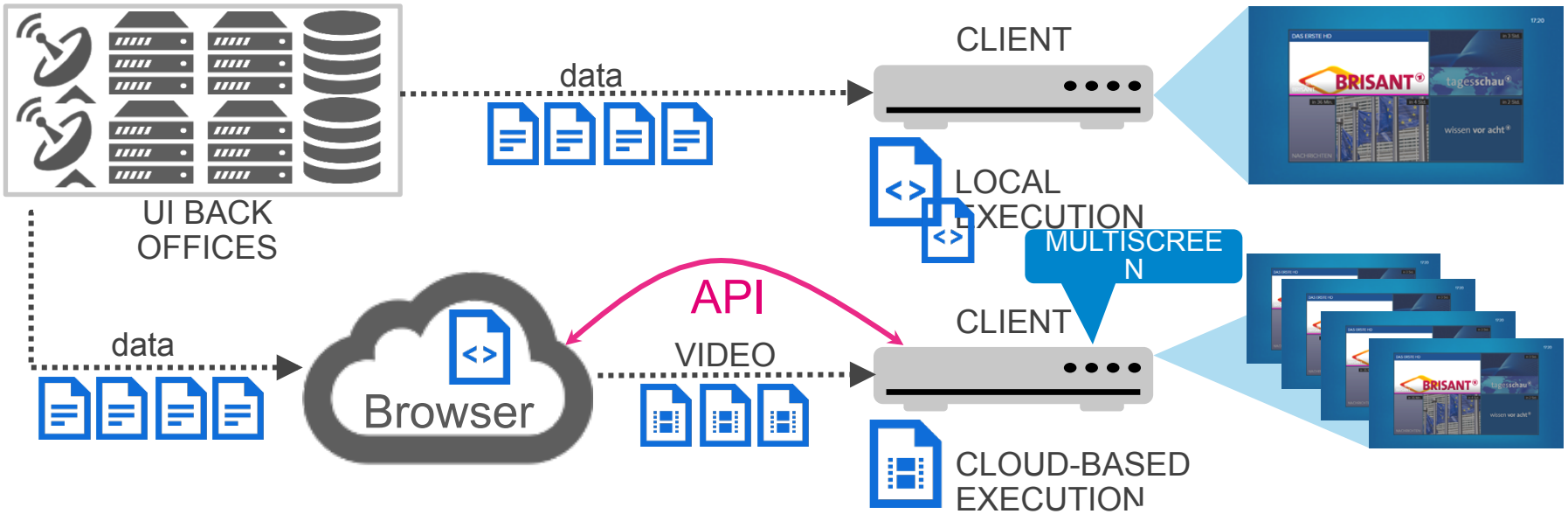

Cloud-rendered ui

- Cloud-rendered UI is a concept that enables the shift of the browser from the STB into the Cloud. Therefore, the rendering of the content/ User Interface happens in the browser in the Cloud. The UI is then delivered to the STB in the H.264 MPEG-TS stream.
- The STB runs a lightweight client that handles video decoding and the key events. Operators has already begun to deploy CloudTV services

implementations

- Cloud UI: Cablevision Systems, Ziggo, Charter Communications, Glashart Media, Liberty Global, Dish
- Adds, OTT: BrightLine, Cablevision, UPC Hungary

CLOUD BROWSING TASK FORCE
WEB AND TV IG

OUTLINE

- Over the last decade Web browsers have reached desktop, mobile and also TV domains.
- Beside connected TVs, more and more new STB deployments all over the world make use of Web browser technology as their core runtime environment for portals and applications.
- However, there are a lot of new coming low-end devices like HDMI-Dongles and lightweight STBs that would never be able to execute the Web browser locally.
- Indeed, also millions o[illegible] ve enough hardware capacity to support W[illegible]

Highly fragmented device market

PROBLEM STATEMENT

- In the last decade, after the Browser has become a runtime environment for STB middleware, a lot of work has been done by standardization bodies on the definition of device APIs.
- These APIs were required to enable the local browser to talk to the local resources of the STBs
- In the mobile domain the major work has been completed by W3C, whereas in the TV domain by the HbbTV and OIPF.
- Analog to this, new emerged Cloud browser Runtime Environments (RTEs) require the definition of APIs that would enable communication between the Cloud browser and the client.
- This is currently a gap on the way to endow Cloud UI architectures with a rich future perspective.

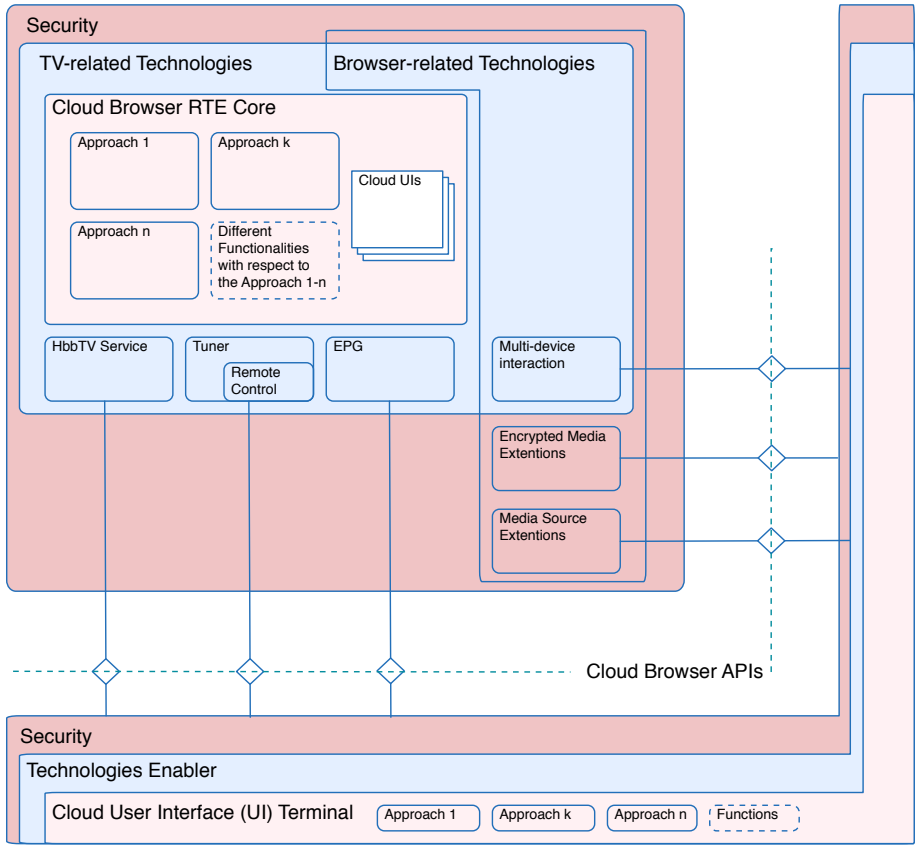

CLOUD BROWSING TF
SCOPE, GOAL & OPEN QUESTIONS

Scope/goal:

- Reference architecture
- Definition of Scenarios and Use Cases
- Definition of missing APIs for Cloud RTE adaptation
- Interface definition
- Align the definition of existing gaps with the work of WGs and CGs

Results:

- Cloud Browser API definition/ description
- Demonstrate where this TF addresses the limit of current standards

Open Questions:

→ Interface definition can not be done within a TF IG

→TF IG or CG?

→ Privacy?

GAP IN EXISTING STANDARDS

Cloud Browsing TF will look into existing technologies and will identify the gap for CB RTE adaptation:

- Canvas
- WebGL
- WebSocket
- Webcrypto

Cloud Browsing TF will look into existing API CGs and WGs and will identify the gap for CB RTE adaptation:

- TVAPI CG
- TV Control API
- Presentation API
- Device API

CLOUD BROWING TF PARTICIPANTS

W3C Members

- Alexandra Mikityuk, Deutsche Telekom
- Oliver Friedrich, Deutsche Telekom
- Louay Bassbouss, Fraunhofer FOKUS
- Calin Ciordas, Irdeto
- Dale Rochon, AT&T
- John Luther, JW Player
- Kumanan Yogaratnam, Espial
- Daniel Davis, W3C
- Paul Higgs, Ericsson
- Bob Lund, CableLabs
- Nilo Mitra, Ericsson
- Kaz Ashimura, W3C
- Harrison Hongseo Yun, Entrix (SK Telecom)
- KPN?

Non-W3C Members

- Active Video
- TVersity
- Zenterio
- Metrological
- Massive Interactive
- University of Sannio

CLOUD BROWING TF TIMELINE

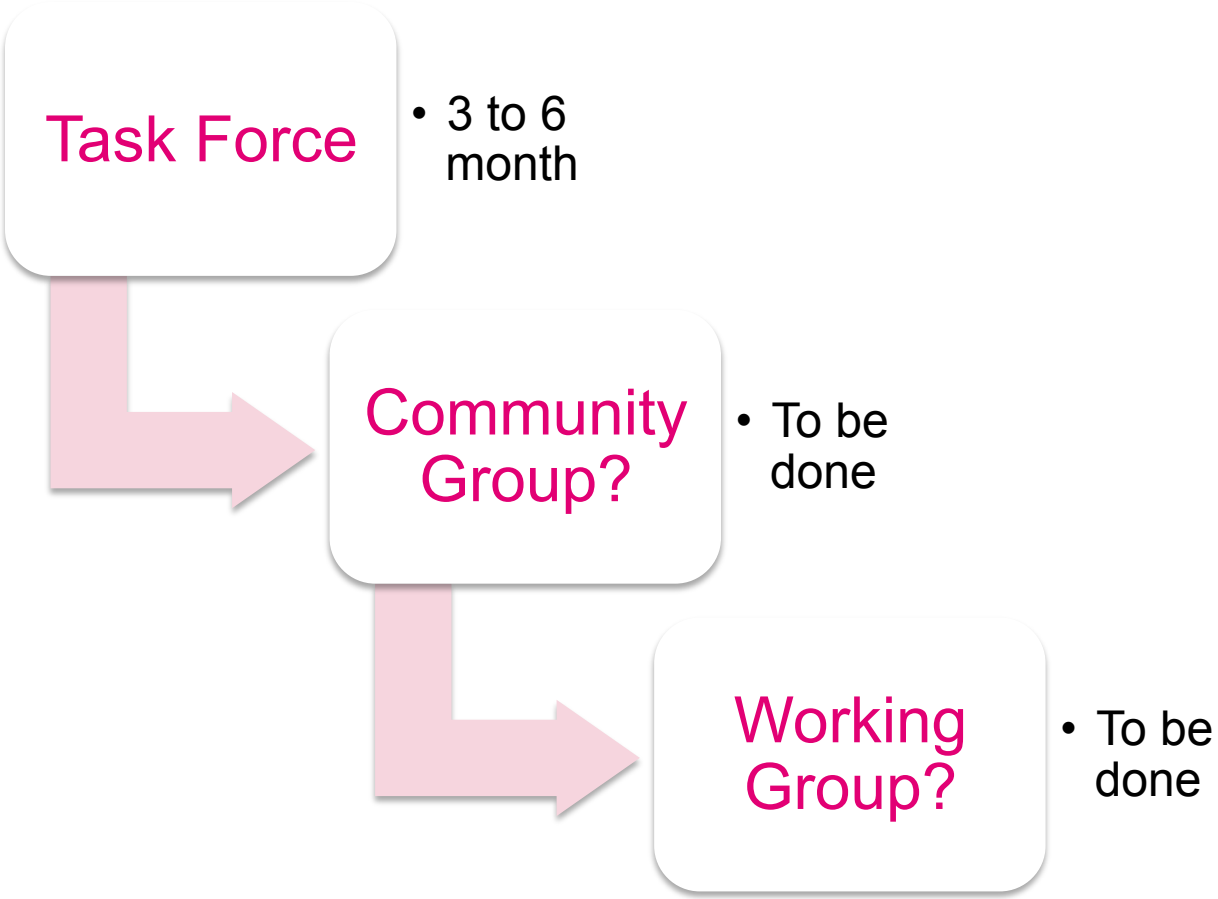

CLOUD BROWSING
What IS DONE SO FAR

CLOUD BROWSING REFERENCE ARCHITECTURE

REFERENCE ARCHITECTURE

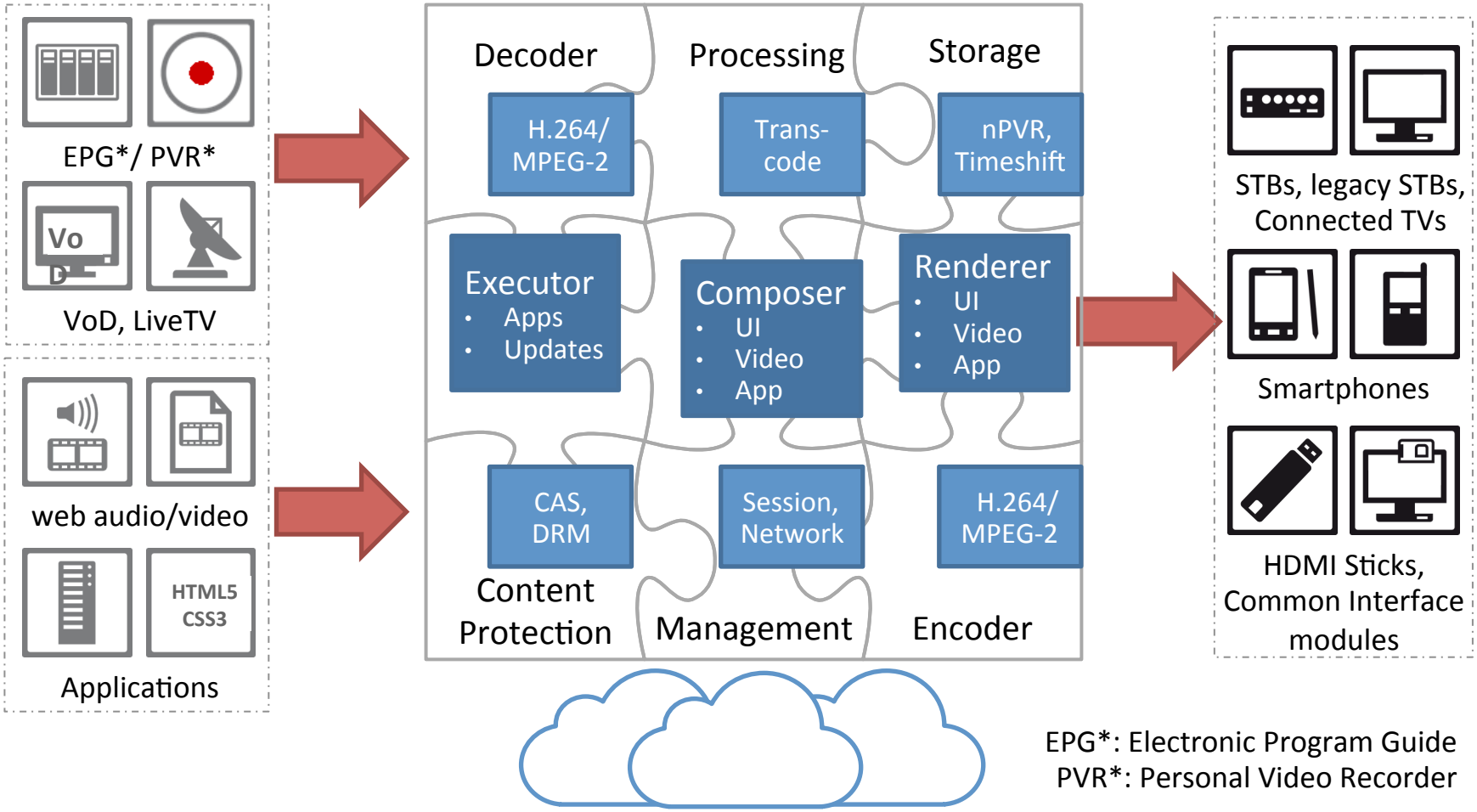

EPG*: Electronic Program Guide
PVR*: Personal Video Recorder

REFERENCE ARCHITECTURE SINGLE AND DOUBLE STREAMS

Double Stream

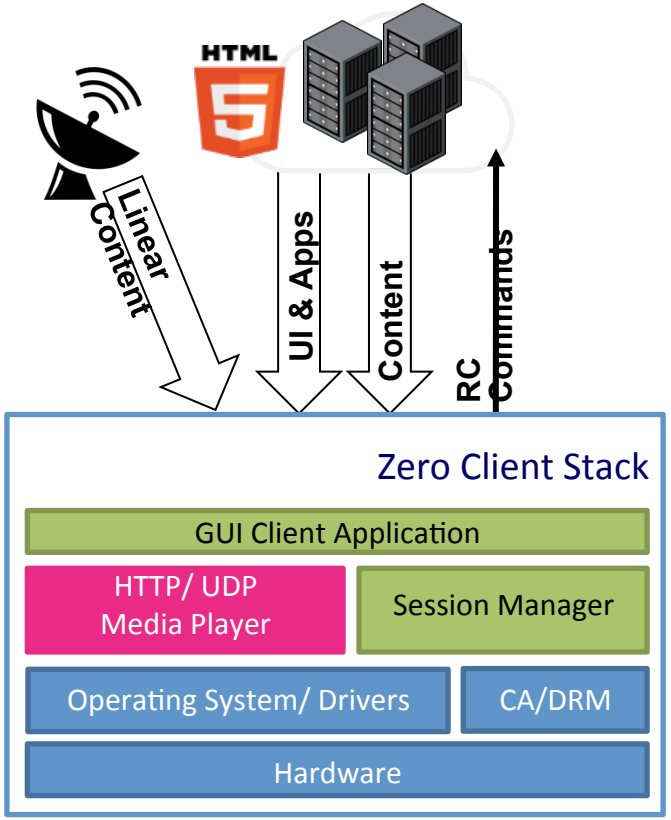

Single Stream

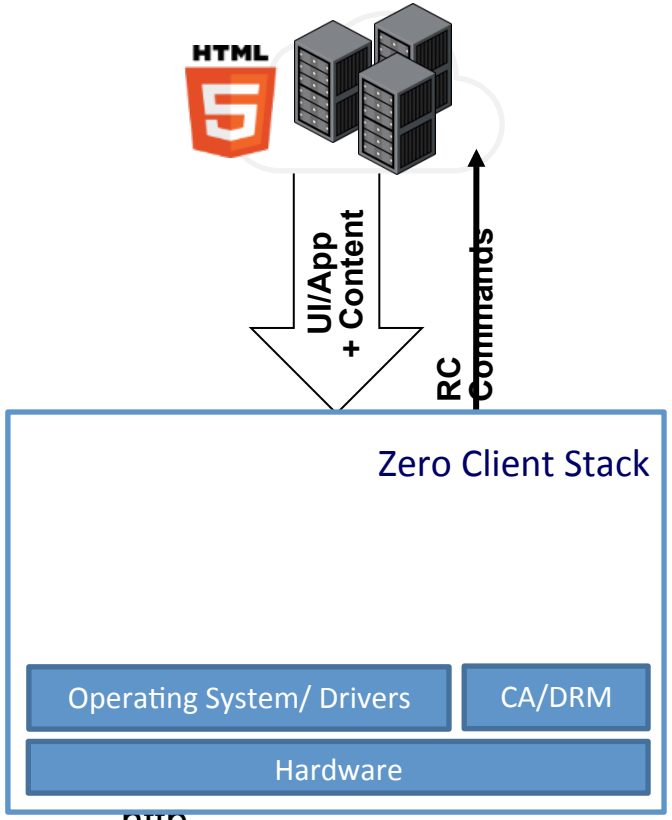

http

Pure decoding box with H.264 decoding

PROBLEM STATEMENT: CLOUD BROWSER -- DEVICE API

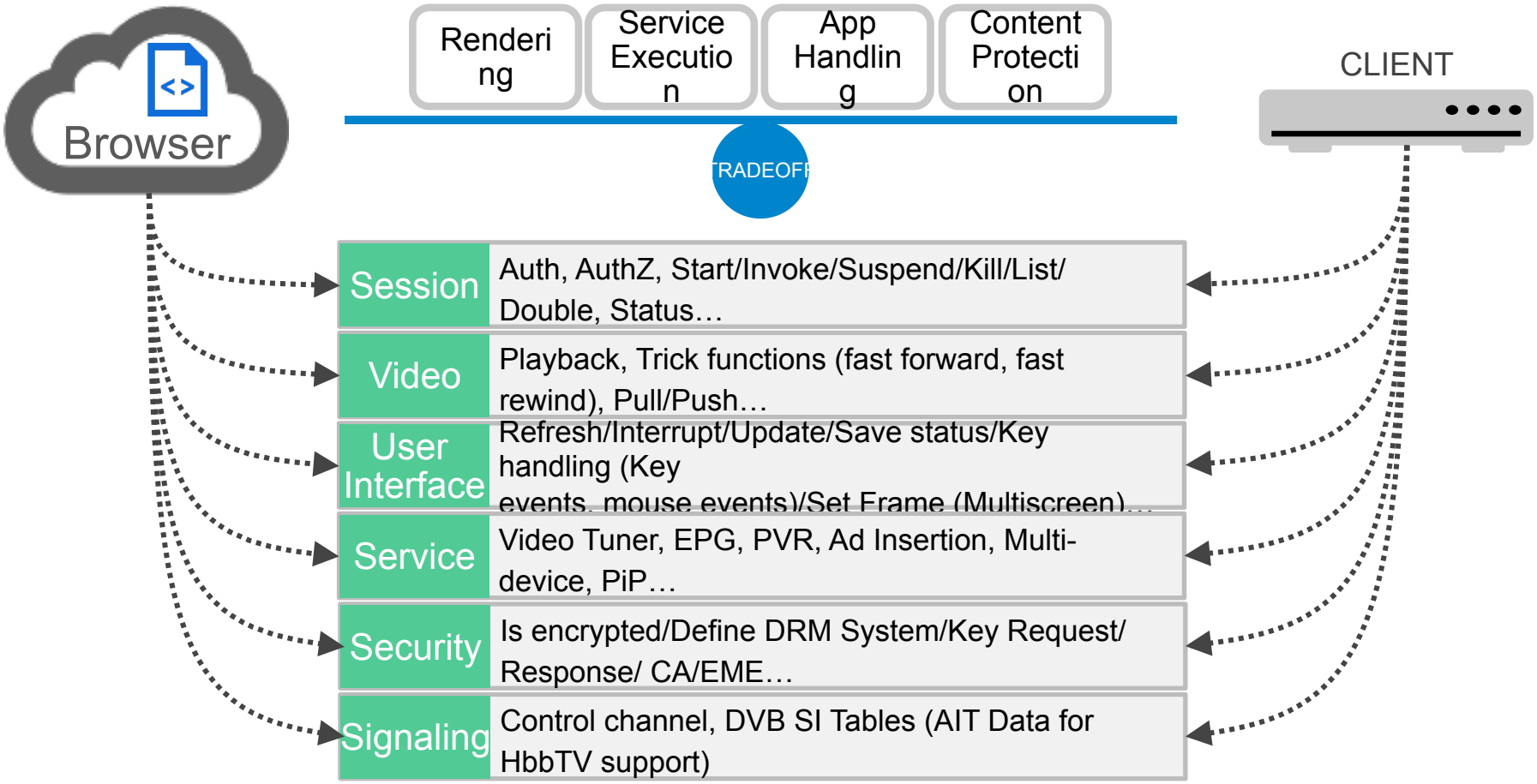

FUNCTION PLACEMENT: SERVER VS. CLIENT

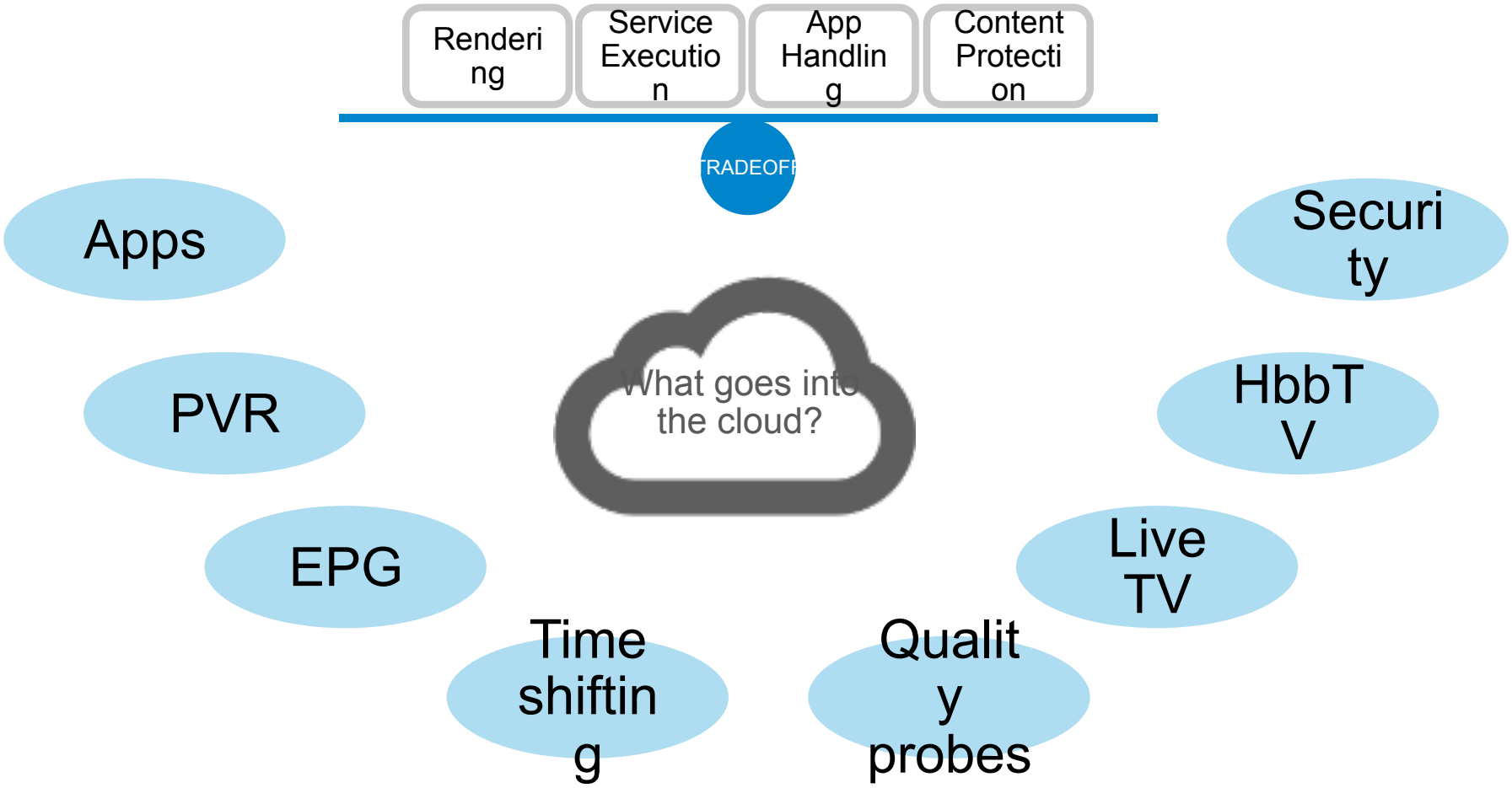

VIRTUAL OS

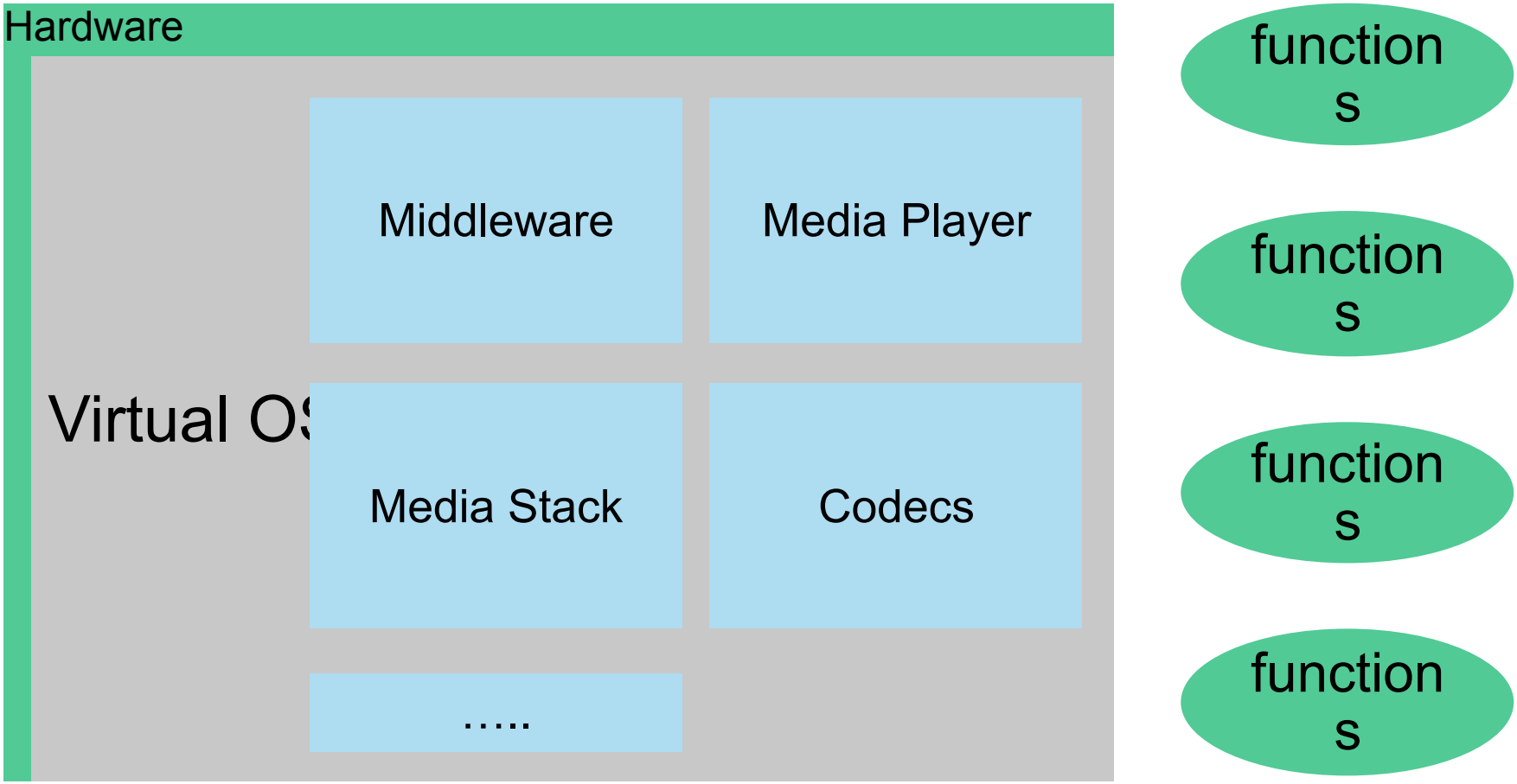
Hardware
Virtual OS
Middleware
Media Player
Media Stack
Codecs
…..
function s
function s
function s
function s

CLOUD BROWSING USE CASES/ APIS

CLOUD BROWSERS USE CASES

Video Tuner/ EPG

- Tuner and EPG APIs are traditionally implemented in the STB based on DVB broadcast specifications.
- Equivalent APIs need to be developed to replace existing Tuner and EPG features.
- A hybrid approach should also be discussed, e.g. Tuner stays in the client, while the EPG is delivered via the Cloud.

Red-button

- Content synchronization between the server and the client side.
- The AIT tables are sometimes different depending on the geo location of the user.
- For scenarios where the Red-Button signaling is terminated on the STB the integrity of the signal must be ensured. Assuming that an attacker can compromise the STB and insert malicious data in the signal, the STB must also be authenticated.

Multi-device

- HbbTV2.0 adds tools to launch and manage applications running on a companion screen.
- If parts or the complete application running on the client and the 2nd screen device are shifted to the cloud the related multi device interaction functions should be adapted accordingly. They are shifted to the cloud too or parts can remain on the device.

Ad Insertion

- Existing requirements (e.g. seamless switching of ad breaks) from the broadcast industries should be considered.
- For cloud based ad-insertion server-side techniques are preferred. Moreover, end users should not able to tamper with the inserted ads.
- Furthermore, the advertisement industry should be enabled to personalize, analyze and collect statistics about played out ads.

Content Protection

- Desktop browsers like Chrome, Firefox and Internet Explorer already support the HTML5 Encrypted Media Extensions (EME) standard. This disrupts a classical DRM approach.
- For the embedded Domain, namely Set-Top-Box and Connected TVs, no final decisions have been made.

MSE/EME

- XMLhttpRequest Handling
- appendbuffer()
- Manipulation of media headers in the Cloud
- IP association

CLOUD BROWSERS USE CASES: MSE AND EME IN DETAIL

MSE/ EME

XMLhttpRequest Handling

- There is not any mechanism provided to distinguish between these requests. However, this is required when the double stream approach is considered
- Therefore, an XMLhttpRequest identifier must be provided to the MSE/EME standard.

appendbuffer()

- The appendbuffer that is defined by the MSE specification does not have any mechanisms to be mapped or associated with the http buffer. This makes the control of a local player from the Cloud Browser more difficult.
- Therefore, a mechanism for buffer mapping must be defined..

MSE/EME some more?

SRM protocols

…

…

media headers

- …manipulation media headers in the cloud
- To save the bandwidth by manipulating the metadata of media files, only media files' headers are processed by the Cloud Browser.
- The MSE/EME standard must be extended with an API that allows such kind of headers' manipulation.

IP association

- In DRM an IP address of the end device is required for authentication and license issuing mechanisms.
- Therefore, if the Cloud Browser would also request the DRM key over XMLhttpRequest, the IP address of the association of the Cloud Browser with the STB is then required here. This is also not a part of the EME standard.

…

…

EXAMPLE: EME FOR CLOUD UI

Depending on the Cloud UI approach, the EME and CDMi interface architecture:

- can either be completely terminated in the cloud,
- or mapped on the Cloud UI on both server- and client-side

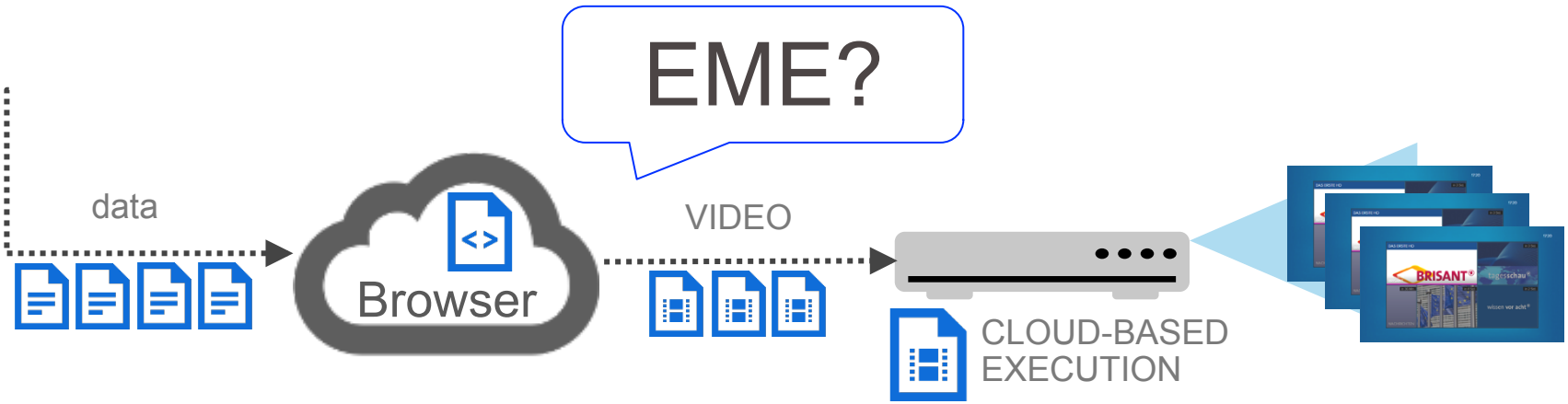

EME FOR CLOUD UI: ASSUMPTION 1

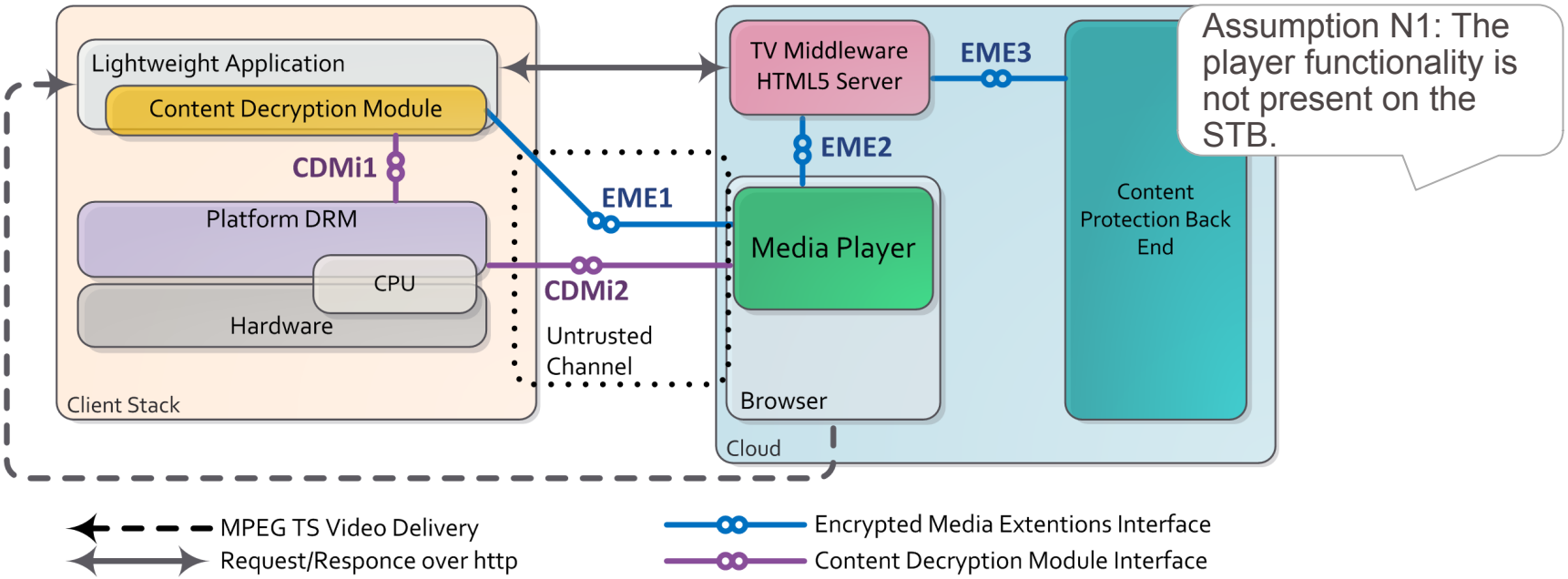

- The EME1 is considered as a trusted channel that resides locally on the STB platform.
- The CDMi2 also as a trusted channel that even might be hardware-supported.

  → violation of the trust model – EME/CDM standard adoptation

EME FOR CLOUD UI: ASSUMPTION 2

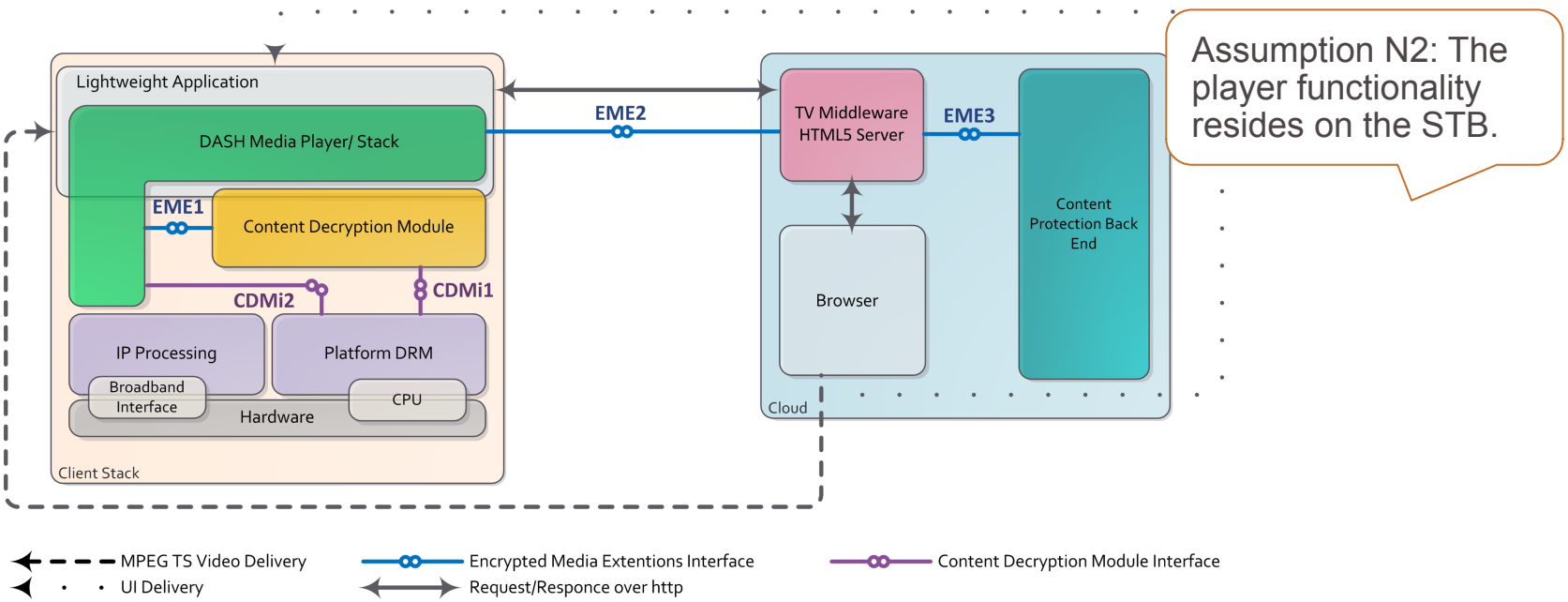

Assumption N2: The player functionality resides on the STB.

- The EME2 interface between the Media Player and the TV application is exposed to the untrusted channel.
- The model does not violate the EME and CDMi trust mode
- The unencrypted content is not exposed over this interface.

Sensitive data?

PRACTICAL TESTS
EME IN TRUSTED EXECUTION ENVIRONMENT

- Browser ←→ TEE interface is needed

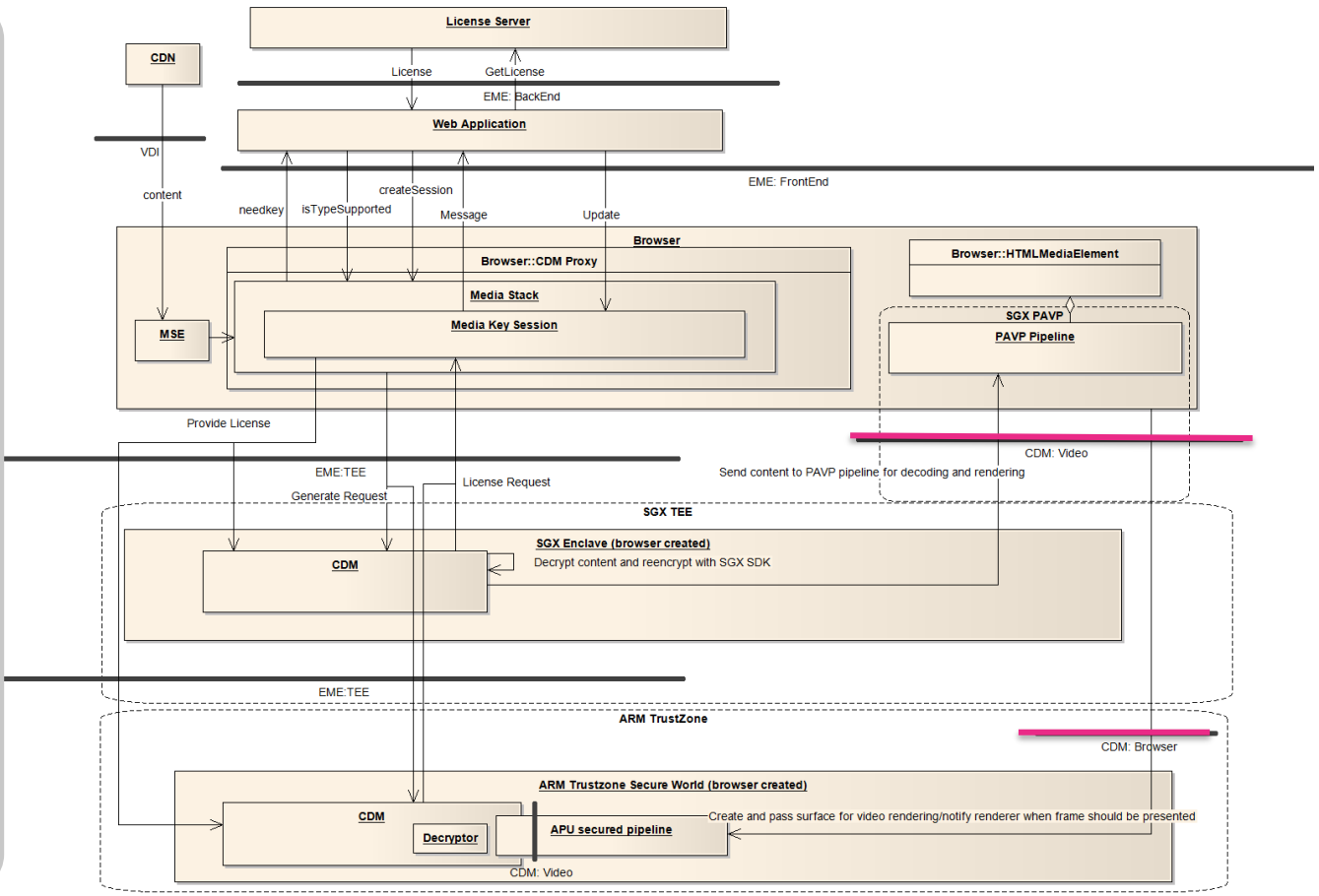

PRACTICAL TESTS
CLOUD HBBTV

1: Cloud HbbTV Execution

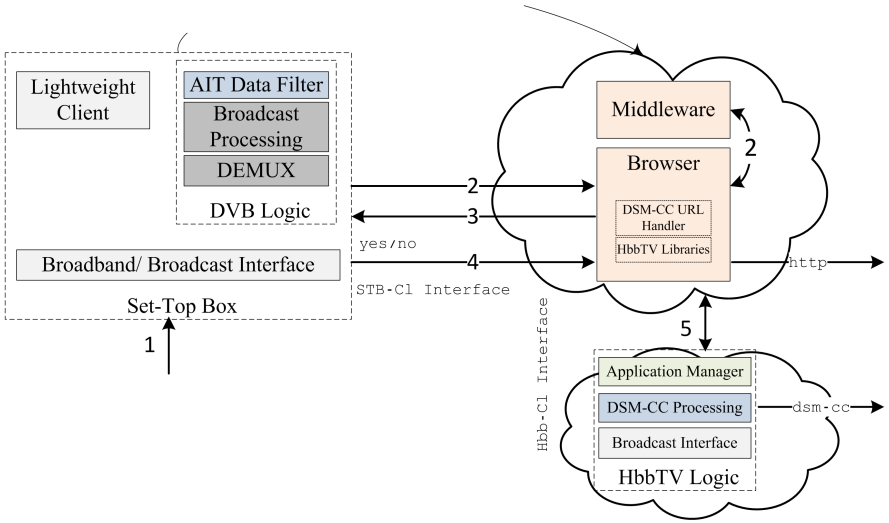

2: Cloud HbbTV Signaling and Execution

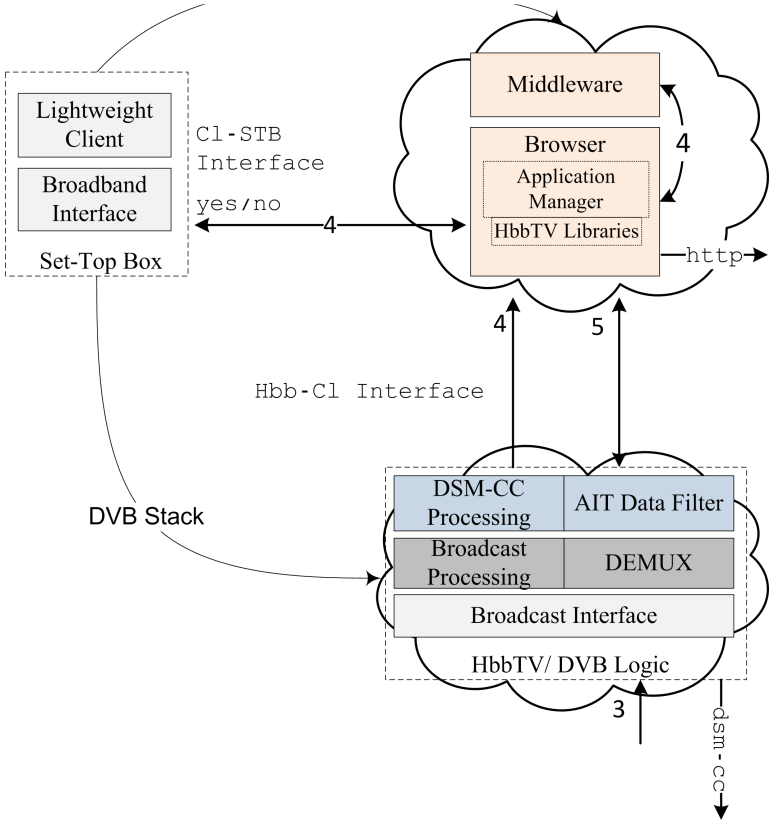

CLOUD HBBTV

- Cloud HbbTV Execution: describes the decoupling of the signaling and execution of applications. Only the HbbTV browser is shifted to the Cloud. The signaling logic stays on the client side.
- Cloud HbbTV Signaling and Execution: the complete HbbTV functionality is virtualized.

THANK YOU FOR YOUR ATTENTION!

ERLEBEN, WAS VERBINDET.

BACK UP

CLOUD BROWSERS: OPEN ISSUES/ CHALLENGES

Video Tuner/ EPG

- Tuner and EPG APIs are traditionally implemented in the STB based on DVB broadcast specifications.
- Equivalent APIs need to be developed to replace existing Tuner and EPG features.
- A hybrid approach should also be discussed, e.g. Tuner stays in the client, while the EPG is delivered via the Cloud.

Red-button

- Content synchronization between the server and the client side.
- The AIT tables are sometimes different depending on the geo location of the user.
- For scenarios where the Red-Button signaling is terminated on the STB the integrity of the signal must be ensured. Assuming that an attacker can compromise the STB and insert malicious data in the signal, the STB must also be authenticated.

Multi-device

- HbbTV2.0 adds tools to launch and manage applications running on a companion screen.
- If parts or the complete application running on the client and the 2nd screen device are shifted to the cloud the related multi device interaction functions should be adapted accordingly. They are shifted to the cloud too or parts can remain on the device.

Ad Insertion

- Existing requirements (e.g. seamless switching of ad breaks) from the broadcast industries should be considered.
- For cloud based ad-insertion server-side techniques are preferred. Moreover, end users should not able to tamper with the inserted ads.
- Furthermore, the advertisement industry should be enabled to personalize, analyze and collect statistics about played out ads.

Content Protection

- Desktop browsers like Chrome, Firefox and Internet Explorer already support the HTML5 Encrypted Media Extensions (EME) standard. This disrupts a classical DRM approach.
- For the embedded Domain, namely Set-Top-Box and Connected TVs, no final decisions have been made.

MSE/EME

- XMLhttpRequest Handling
- appendbuffer()
- Manipulation of media headers in the Cloud
- IP association

ADRESSING HIGH FRAGMENTATION

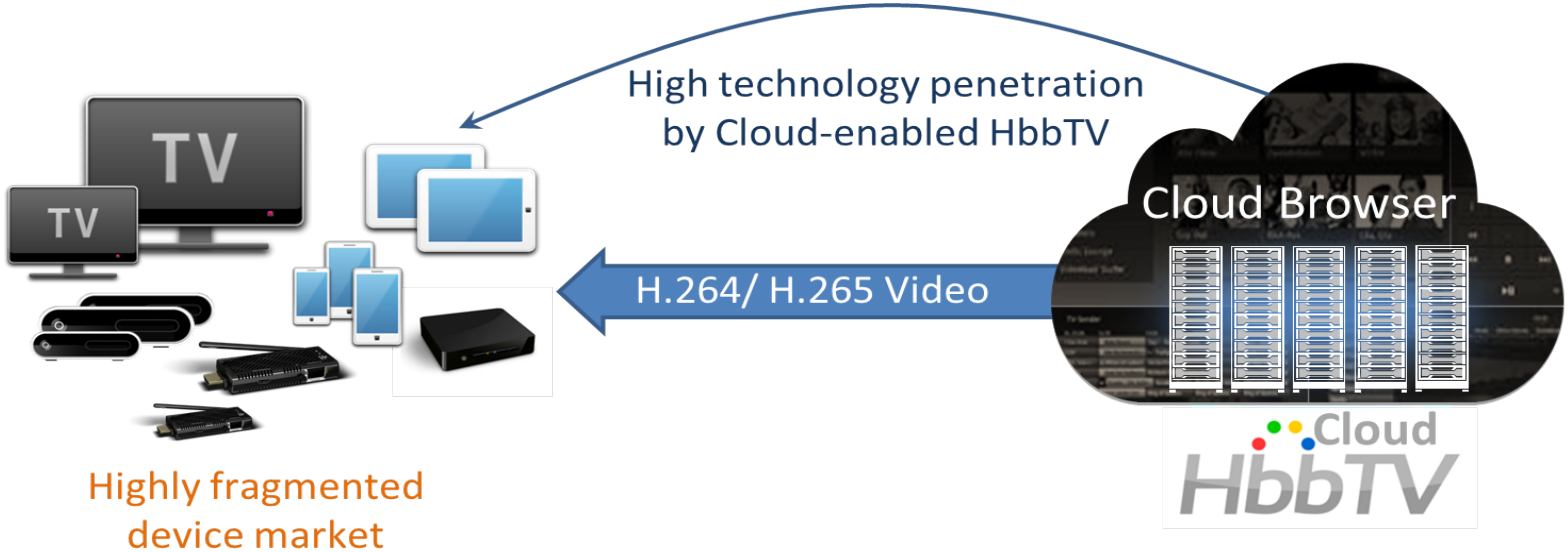

Video compression	HbbTV Browser does not support HbbTV 2.0	Non HbbTV-Clients	Low-end devices
H.264	Hybrid STBs	Mobile devices and current available STBs	Low-cost and legacy Set-Top Boxes
H.265		Future mobile & STB platforms	Future low-cost devices

RED BUTTON TO CLOUD
SCENARIO 1: CLIENT-SIDE IMPLEMENTATION

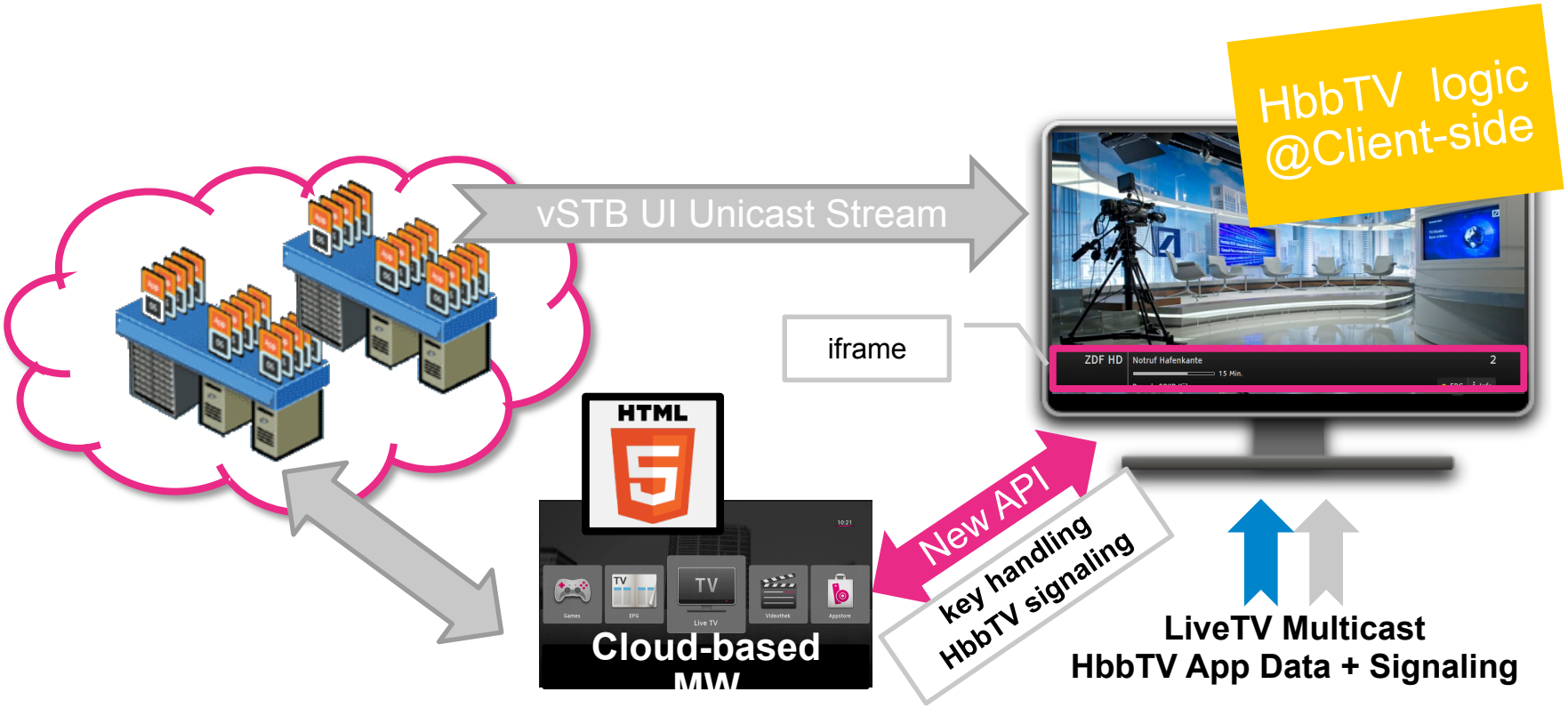

To be done by T-Labs	
	▪ HbbTV Listener on the client-side (OpenCaster Implementation) ▪ New APIs between the cloud-based MW (HTML5 TV Portal) and the client to forward the HbbTV Signaling and HbbTV key handling to the Cloud ▪ MessageBusHandler for the HbbTV app index.html for HbbTV key handling

RED BUTTON TO CLOUD SCENARIO 2: SERVER-SIDE IMPLEMENTATION

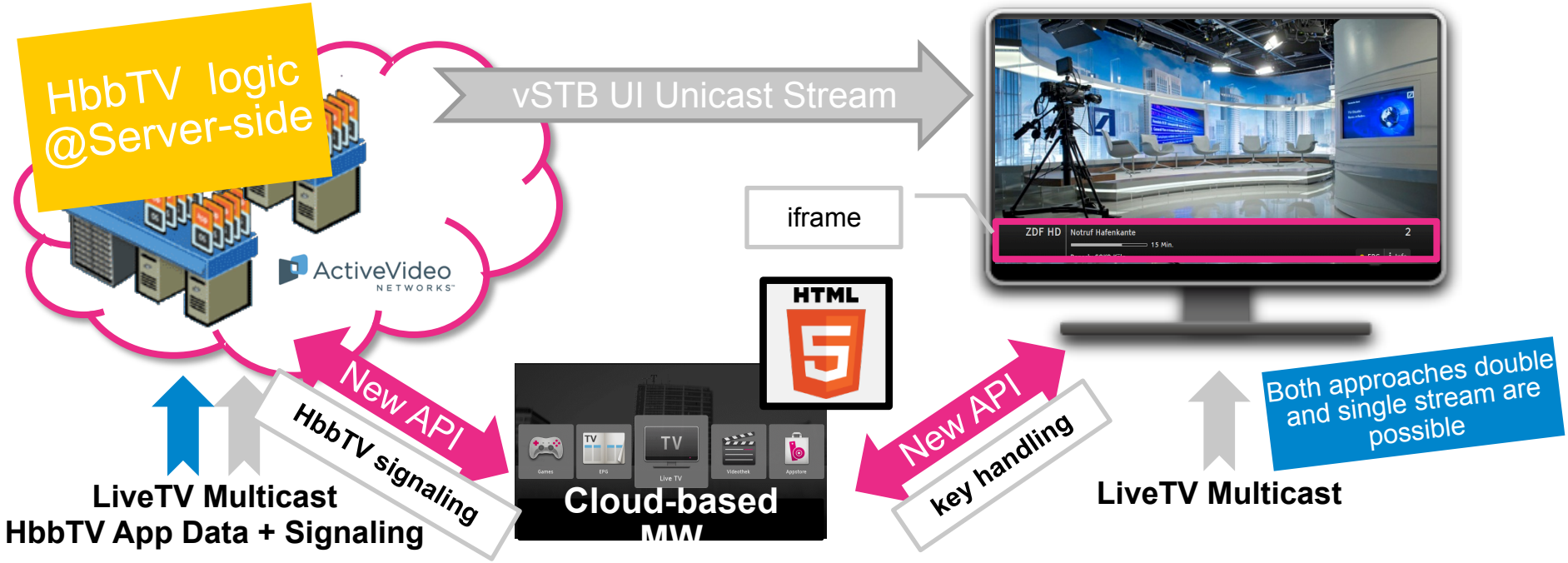

To be done by T-Labs	
	▪ HbbTV Listener on the server-side (OpenCaster Implementation) ▪ New APIs between the cloud-based MW (HTML5 TV Portal) , vSTB and the client to forward the HbbTV Signaling and HbbTV key handling to the Cloud ▪ MessageBusHandler for the HbbTV app index.html for HbbTV key handling ▪ Notice: The HbbTV Listener functionalities can be also implemented on the Master STB (Scenario 3)

HYBRID BROADCAST BROADBAND TV

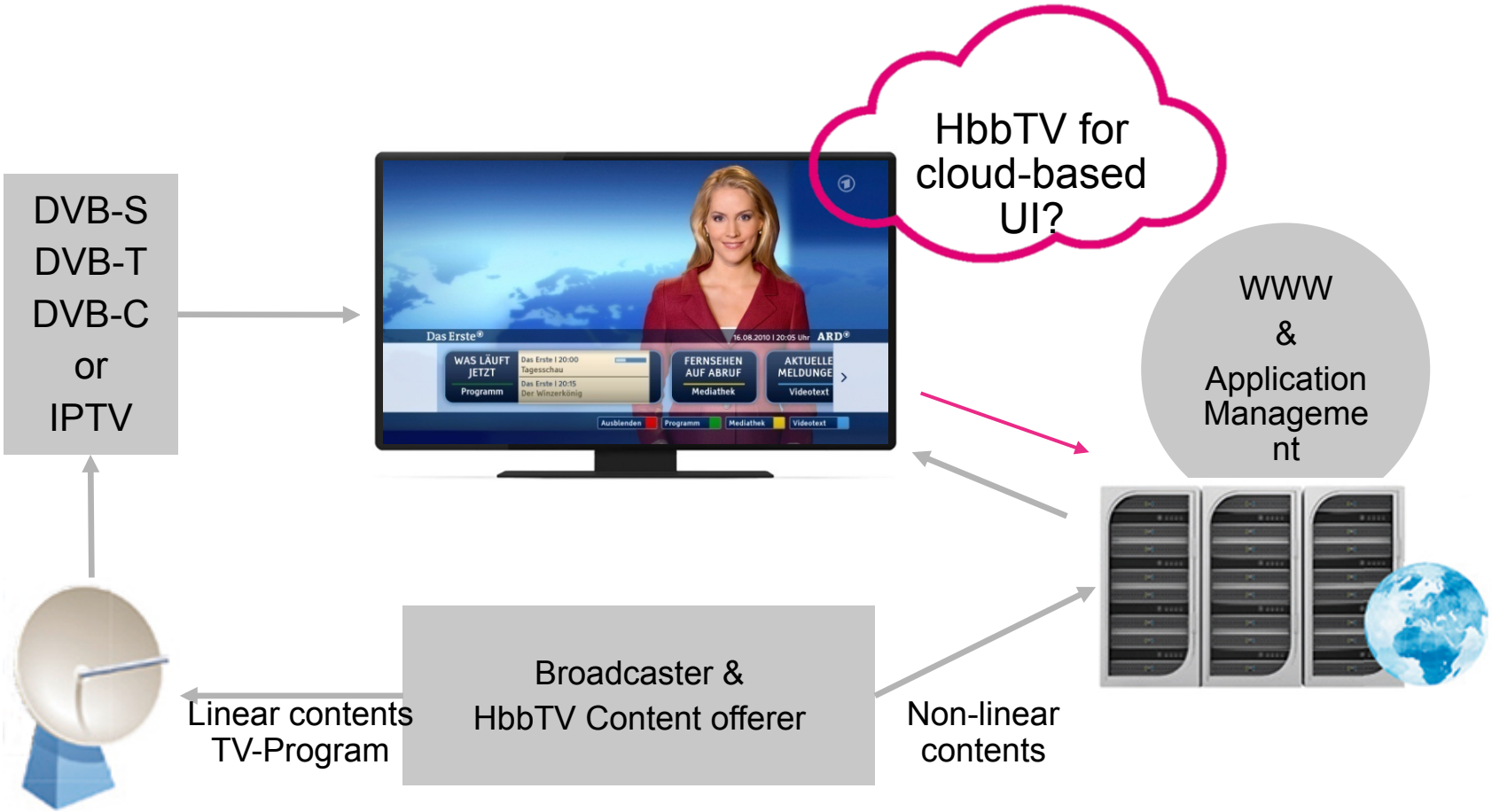

Based on [11]